FIRST ANGLE PROJECTION (ALL DIMENSIONS IN MILLIMETRES)

05-228/C

CAUTION THE INFORMATION ON THIS DOCUMENT IS THE PROPERTY OF BHARAT HEAVY ELECTRICALS LTD. IT MUST NOT BE USED DIRECTLY OR INDIRECTLY IN ANY WAY DETRIMENTAL TO THE INTEREST OF THE COMPANY.

DRAWING NO. 2-80-655-15963

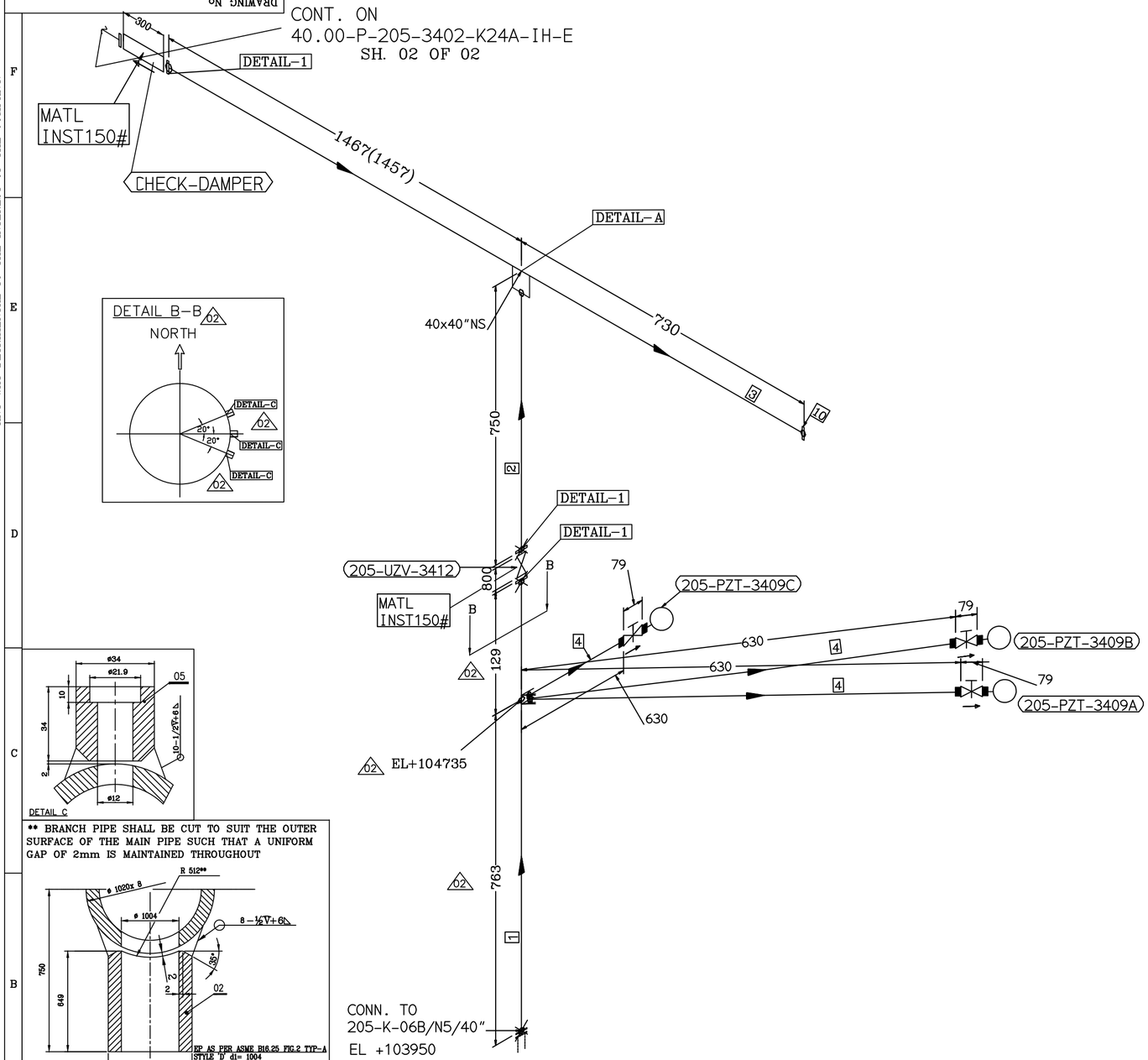

NOTES:

ALL DIMENSIONS ARE IN MILLIMETRES

1. DESIGN PRESSURE – 0.2 KG/CM2 (G) DESIGN TEMPERATURE: 450°C
2. FOR STANDARD NOTES OF PRODUCTION AND ERECTION OF PIPES AND TOLERANCE ON FITTINGS REFER DRG NO. 4-80-001-37654 & 4-80-301-26192
3. FOLLOW APPLICABLE QP AND PAINTING SCHEDULE FOR THE PROJECT
4. ALL UNMARKED BENDS/ELBOWS ARE 90 DEG
5. PIPE ENDS SHALL BE BEVELLED AS PER B16.25 FIG.2 TYPE-A
6. GASKET IS SUPPLIED VIDE 7419-80-733 PGMA.
7. FOR ELECTRODE DATA REFER

PIPE SIZE	MATERIAL SPEC	EP FIG	WELD SPEC	ELECTRODE DATA	
				ROOT RUN	FILLER RUN
OD1020x8	ASTMA516 GR.70	FIG-A	8 V̂	ER70S-2/ E6010/E6013	ER70S-2/ E7016/E7018

8. THREADS SHALL BE UNIFIED(UNC FOR UPTO 1" DIA) AS PER ASME B1.1 WITH CLASS 2A FIT FOR STUDS AND CLASS 2B FIT FOR NUTS.
9. 01 0 INDICATES WELD AT SHOP.
10. 01 ⊗ INDICATES WELD AT SITE.

ITEM CODE	ITEM NO.	DESCRIPTION	DRAWING NO.	ITEM NO. / VAR	MATERIAL CODE / MATERIAL SPEC.	A / C	UNIT WT. / QTY.
FBF6321Z032ZZZZZZ	10	FLANGE.BLIND CL.150 FF/125AARH 40"	2-80-655-16009	08	--- / ASTM A 516 GR.70	C	80.731 / 1
GKFDR22Z03202ZZZZ	09	GASKET JOB STD EXPANDED PTFE CORD 150# 7MM THK – 40"	2-80-655-15963		---- / ----		--.-- / 4
---	08	NUT 5/8" UNC	2-80-655-15963		---- / A194 GR.2H		0.033 / 256
---	07	STUD 5/8" UNC L=113	2-80-655-15963		---- / A193 GR.B7		0.224 / 128
02 FNF6321Z032ZZZZZZ	06	FLANGE.SO CL.150 FF/125AARH 40"	2-80-655-16008	08	--- / ASTM A 516 GR.70	C	38.306 / 4
WK602D3Z004ZZZZZZ	05	B16.11 SW HALF COUPLING 1/2" CL 6000	4-80-655-83151		--- / ASTM A 105	C	0.210 / 3
P121977Z00410ZZZZ	04	PIPE OD21.3X4.78 L=2000	2-80-655-15963		--- / SA 106 GRB	C	1.947 / 1
02 P18Y613Z03263ZZZZ	03	P.F PIPE OD1020X8 L=2187	2-80-655-16047	07	--- / ASTM A 516 GR.70	C	436.629 / 1
02 P18Y613Z03263ZZZZ	02	P.F BRANCH PIPE OD1020X8 L=649	2-80-655-16047	06	--- / ASTM A 516 GR.70	C	129.570 / 1
P18Y613Z03263ZZZZ	01	P.F PIPE OD1020X8 L=892 02	2-80-655-16047	05	--- / ASTM A 516 GR.70	C	178.085 / 1

** BRANCH PIPE SHALL BE CUT TO SUIT THE OUTER SURFACE OF THE MAIN PIPE SUCH THAT A UNIFORM GAP OF 2mm IS MAINTAINED THROUGHOUT

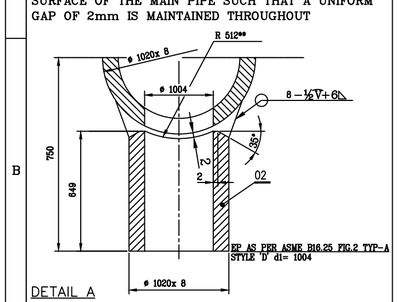

DETAIL-1

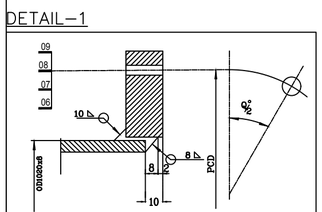

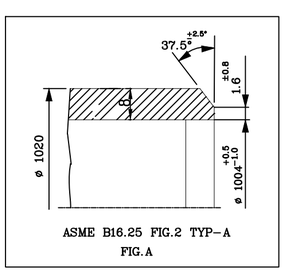

ASME B16.25 FIG.2 TYP-A
FIG.A

REV	DATE	ALTERED	M.P.K	REV	DATE	ALTERED	M.P.K
02	29.05.19	APPROVED	TRINADH	01	29.04.19	APPROVED	TRINADH
ZONE	DRAWING REVISED AS PER LATEST EIL DRAWING. REVISION MARKED AS 02			ZONE	DRAWING REVISED AS PER MAIL FROM EIL DT: 24.04.19 REVISION MARKED AS 01		

N

CUSTOMER: INDIAN OIL CORPORATION LIMITED (HALDIA)

CONSULTANT: ENGINEERS INDIA LIMITED (EIL) NEW DELHI

NAME OF PROJECT: BS-VI, HALDIA

BHEL CUSTOMER NO: 7419

BHARAT HEAVY ELECTRICALS LTD., PIPING CENTRE, CHENNAI 600 017

	NAME	SIGN	DATE	NO OF ITEMS
DRN	M.P.K	-sd-	07.03.19	
CHD	TRINADH	-sd-	07.03.19	
APPD	C.SARAVANAN	-sd-	07.03.19	

DEPT. / CODE	GRADE OF UN TOL. DIM	SCALE	WEIGHT (Kg).	ITEM No.
	C/M/F			

TITLE	EIL DRAWING NO:	CARD CODE	DRAWING No.	REV
40-P-205-3403-K24A-IH-E		U 01	2-80-655-15963	02

SIZE A2

V: A2